Havis, Inc.
75 Jacksonville Road
Warminster, PA 18974
T 800-524-9900 F 215-957-0729
www.havis.com

C-SW-8 Wiring Diagram / Instructions
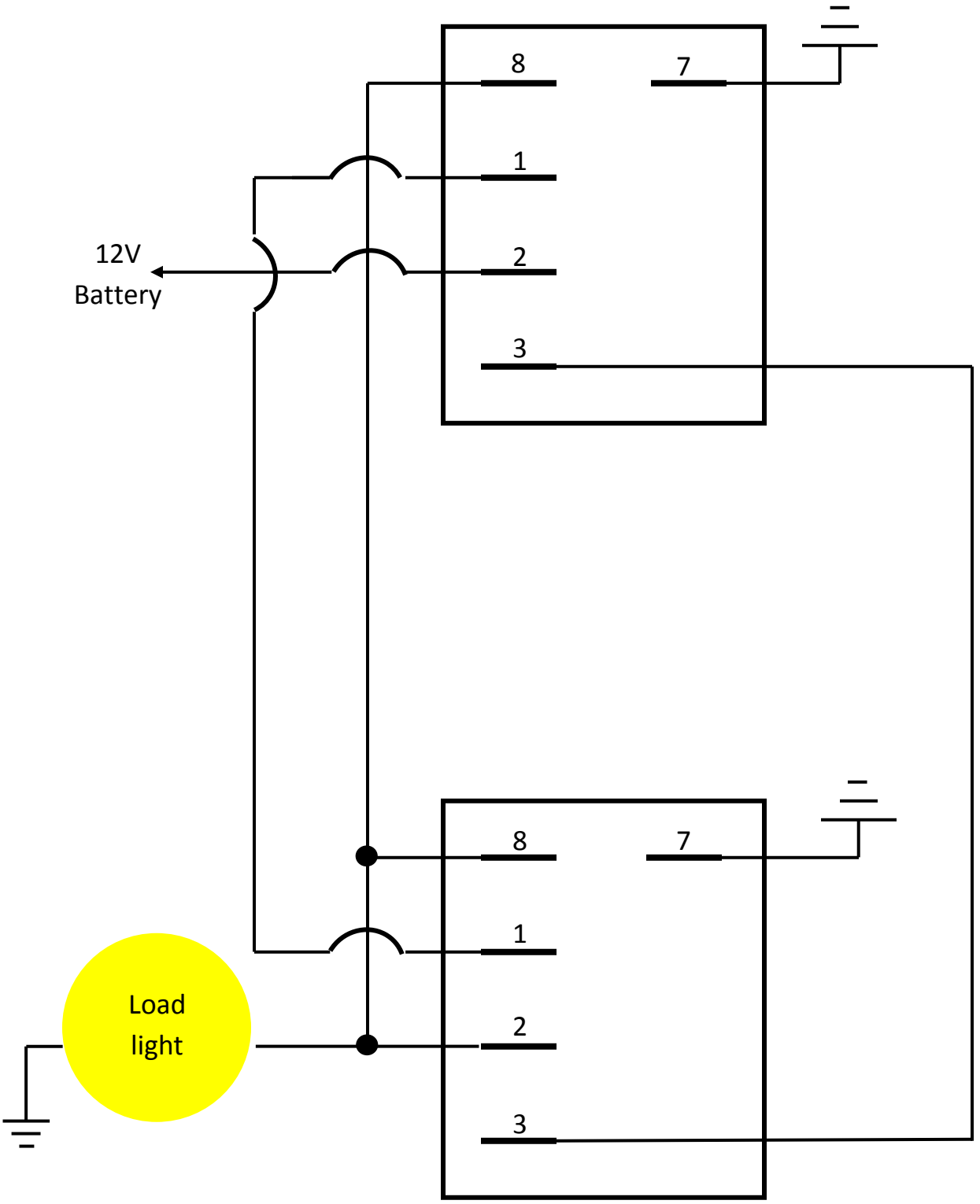
Looking at back of switches