REVISIONS				
REV.	DESCRIPTION	ECN	DATE	APPROVED
B	REFER TO ECN	12983	12/1/14	KAD

MAXIMUM CHARACTERISTICS

Application:
CPX Chassis Rack Mounted 24 Volt DC Protection

Electrical Performance:
Protection Modes: DC + to DC -, DC + to Ground, DC - to Ground
Nominal Operating Voltage U_n: 24 Vdc
Maximum Continuous Operating Voltage U_c: 39 Vdc
Maximum Load Current: 15 Amps
Nominal Discharge Surge Current (8/20) I_n: 5 kA (8/20 εs) per protection mode
Protection Level @ 500 A, 8/20¸ s: 83 V_{pk}
Response Time: <5 nano-seconds
Suppression Leakage Current at U_n: <30 εA
Failure Mode: Power disconnect from radio if suppression fails
Over-Current Protection: Replaceable cartridge fuse (1.25" x Ï .25")
List of approved fuses shown in Table 1.

Approvals: RoHS compliant, CE compliant
IEC/ANSI/UL/CSA 60950 compliant
Hazardous Location Certifications: ETL Class I Div 2

Mechanical:
DC Power Input/Output Connections: Spring Cage Clamp
Wire Range: #24 to #8 AWG
Dimensions: 1.99" [51mm] x 1.63" [41mm] x .3.08" [78mm]
Weight: <1 lbs [.45 kg]

Environmental:
Operating Temperature: -40ÜC to +85ÜC
Relative Humidity: <95% (non-condensing)

Mounting: CPX chassis compatible
Chassis P/N: 1101-972

Cooper Bussmann ABC Series Fuse	
Current Rating (Amps)	Part Number
1	ABC-1-R
1-1/2	ABC-1-1/2-R
2	ABC-2-R
2-1/2	ABC-2-1/2-R
3	ABC-3-R
4	ABC-4-R
5	ABC-5-R
6	ABC-6-R
7	ABC-7-R
8	ABC-8-R
10	ABC-10-R
12	ABC-12-R
15	ABC-15-R

Table 1. List of approved fuses.

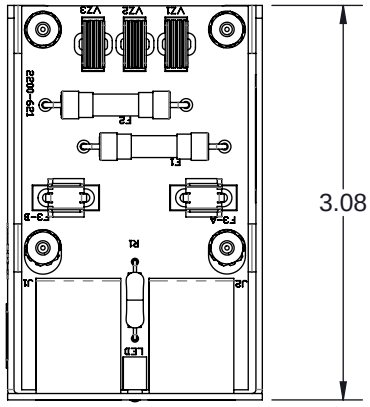

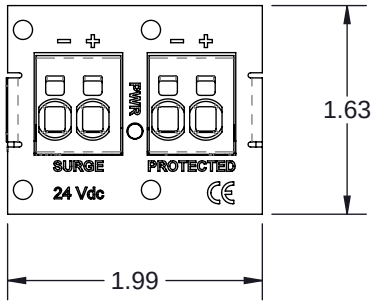

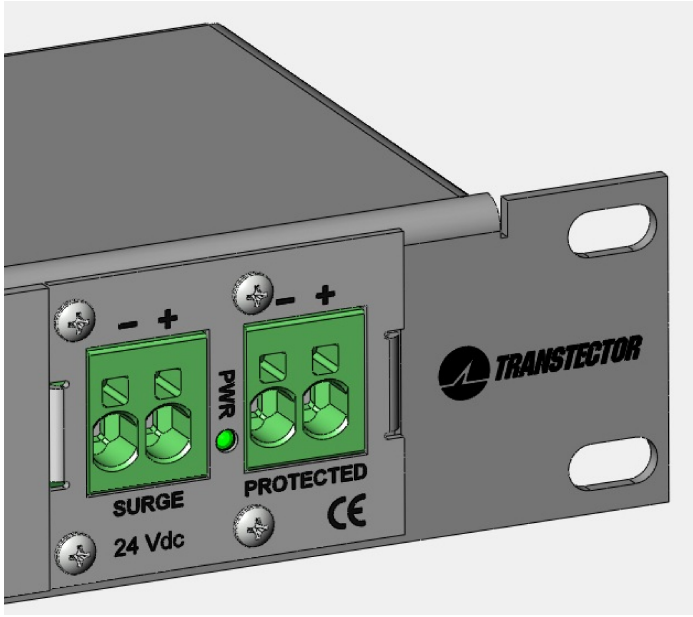

ALL DIMENSIONS SHOWN ARE FOR REFERENCE ONLY.

UNLESS OTHERWISE SPECIFIED LEADING DIMENSIONS ARE INCHES DIMENSIONS IN [ ] ARE MILLIMETERS
TOLERANCES:
FRACTIONS=Ñ 1/32 .XX=Ñ .02
ANGLES=Ñ 1 Á .XXX=Ñ .005

NOTICE: THE INFORMATION AND DESIGN IN THIS DOCUMENT IS THE PROPERTY OF TRANSTECTOR SYSTEMS. ALL RIGHTS RESERVED.

THIRD-ANGLE PROJECTION

DRAWN	DPM	DATE 3/3/14
ENG APPD	EJD	3/5/14
PRODUCT MGR	MLH	3/6/14
MARKETING APPD	LJ	3/6/14
PROJECT NO.	DD116264	
DOCUMENT NAME	1000-1464-C	

TRANSTECTOR

SHEET 1 OF 1
SCALE 2:3

TITLE
CPX DC DEFENDER 24
CUSTOMER SPECIFICATION

SIZE	CAGE	PROD CAT	PART NUMBER	REV
A	30992	DCT	1000-1464	B

THESE COMMODITIES, TECHNOLOGY OR SOFTWARE WERE EXPORTED FROM THE UNITED STATES IN ACCORDANCE WITH THE EXPORT ADMINISTRATION REGULATIONS. DIVERSION CONTRARY TO U.S. LAW PROHIBITED.

É 2014 Smiths Power. All rights reserved.