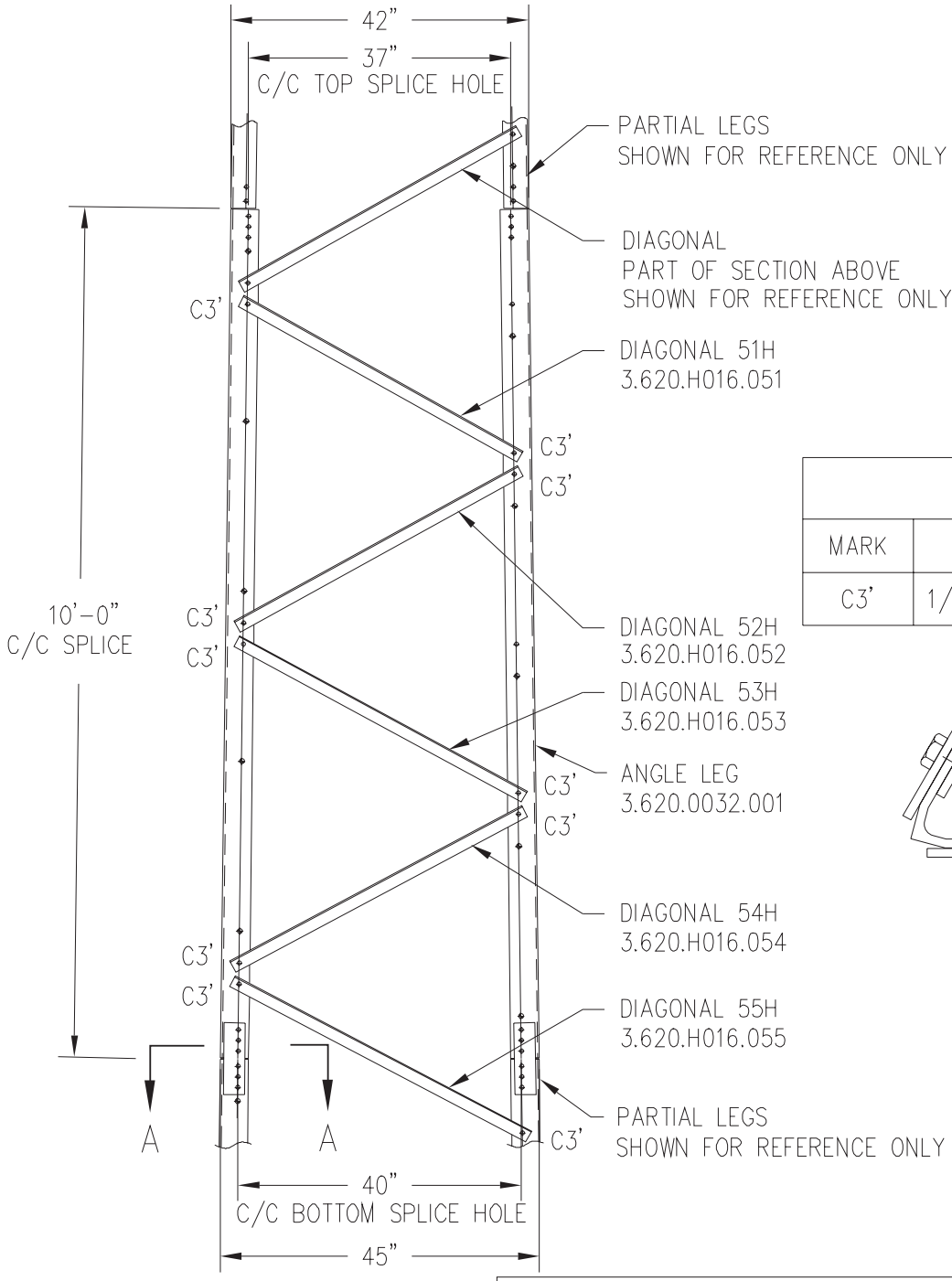

SECTION #11HD

BOLT SCHEDULE		
MARK	SIZE	QTY
C3'	1/2" X 1-1/2" A325 + F/W	30

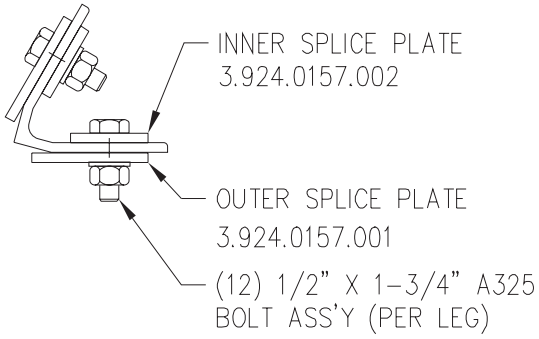

SECTION A-A
SPLICE DETAIL #6

PRE-ASSEMBLED SECTION #11 - KIT #5.95.0111.0HD
KNOCK-DOWN SECTION #11 - KIT #5.94.0111.0HD

COPYRIGHT HEREIN IS THE PROPERTY OF TRYLON MANUFACTURING COMPANY LTD. ALL DUPLICATION, RECORDING, DISCLOSURE OR USE IS PROHIBITED WITHOUT WRITTEN CONSENT OF TRYLON MANUFACTURING COMPANY LTD.

REV.	REV. BY:	CHK. BY:	DESCRIPTION	DATE

NOTES:

SUPER TITAN™ SELF-SUPPORT

TRYLON TSF

CUSTOMER:	SITE:	SCALE: 25.000	
DATE: 3 JUN 04	BY: MAW	CHK: JAG	APP: JB
TITLE: ASSEMBLY OF SECTION #11HD		DRAWING NO. 000001.620.0026	