REVISIONS				
REV.	DESCRIPTION	ECN	DATE	APPROVED
B	REFER TO ECN	11838	7/9/13	MTH
C	CHANGE IP65 TO IP67	11988	9/10/2013	JJ

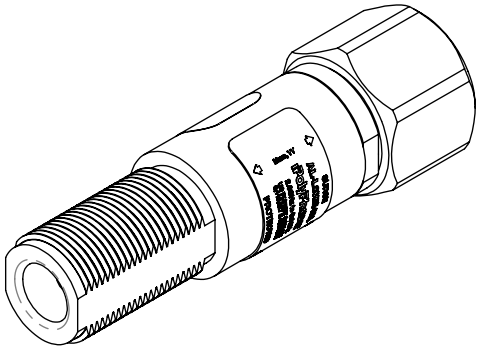

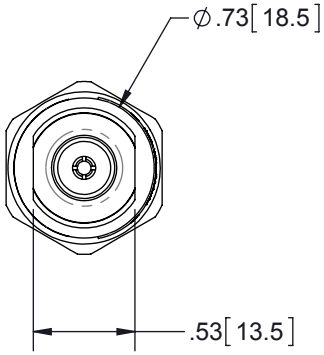

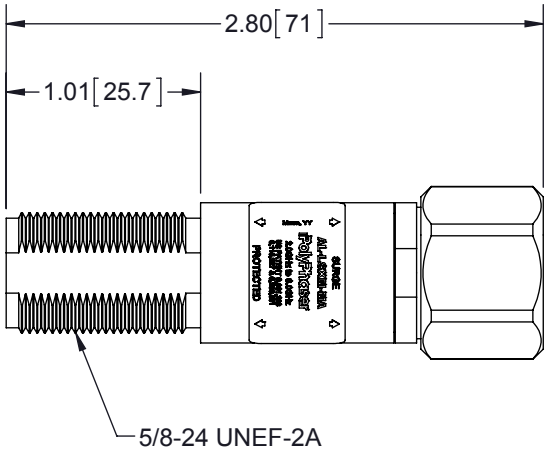

MAXIMUM CHARACTERISTICS

APPLICATION:
BULKHEAD MOUNT/ALUMINUM CONSTRUCTION
WEATHERPROOF WHEN INSTALLED

SURGE:
10kA IEC 61000-4-5 8/20µs WAVEFORM

FREQUENCY RANGES:
2.0GHz TO 6.0GHz

VSWR:
≤1.2:1 TYPICAL (≤1.3 TO 1 MAX.)

INSERTION LOSS:
≤0.1dB TYPICAL (≤0.2dB MAX.)

RETURN LOSS:
≥20dB TYPICAL (≥18dB MAX.)

CONTINUOUS POWER:
10W

LET THROUGH VOLTAGE:
≤±3 VOLTS FOR 3kA @ 8/20µs WAVEFORM

THROUGHPUT ENERGY:
≤0.5µJ FOR 3kA @ 8/20µs WAVEFORM

TEMPERATURE:
-40°C TO +85°C STORAGE/OPERATING

VIBRATION:
1G AT 5Hz TO 100Hz

ENVIRONMENTAL:
MEETS IEC 60529 IP67 (C)
MEETS BELLCORE #TA-NWT-000487
PROCEDURE 4.11, WIND DRIVEN (120MPH)
RAIN INTRUSION TEST

CUSTOMER APPROVAL: _____ DATE: _____

ALL DIMENSIONS SHOWN ARE FOR REFERENCE ONLY.

UNLESS OTHERWISE SPECIFIED LEADING DIMENSIONS ARE INCHES DIMENSIONS IN [ ] ARE MILLIMETERS

TOLERANCES:
FRACTIONS=± 1/32 .XX=± .03
ANGLES=± 1° .XXX=± .010

NOTICE: THE INFORMATION AND DESIGN IN THIS DOCUMENT IS THE PROPERTY OF POLYPHASER CORPORATION. ALL RIGHTS RESERVED.

THIRD-ANGLE PROJECTION

DRAWN	RCD	3/16/04
ENG APPD	RCD	3/16/04
PRODUCT MGR	JLJ	3/16/04
MARKETING APPD	SJD	3/16/04
PROJECT NO.		

PolyPhaser®

SHEET 1 OF 1
SCALE 1:1

TITLE
LOOP-FILT
2-6GHz 10W
CUSTOMER SPECIFICATION

DOCUMENT NAME	SIZE	CAGE	PROD CAT	PART NUMBER	REV
AL-LSXM-MA-C	A	61114	RFP	AL-LSXM-MA	C

THESE COMMODITIES, TECHNOLOGY OR SOFTWARE WERE EXPORTED FROM THE UNITED STATES IN ACCORDANCE WITH THE EXPORT ADMINISTRATION REGULATIONS. DIVERSION CONTRARY TO U.S. LAW PROHIBITED.

© 2015 Polyphaser. All rights reserved.