LIST OF MATERIAL				
ITEM	QTY.	PART NO.	DESCRIPTION	WEIGHT
1.	3	TW00124	WELDMENT, BASE SHOE	86
2.	7	C40026003	BOLT ASSEMBLY, 1/2 ø X 1 1/2 A325	2
			TOTAL WEIGHT	88

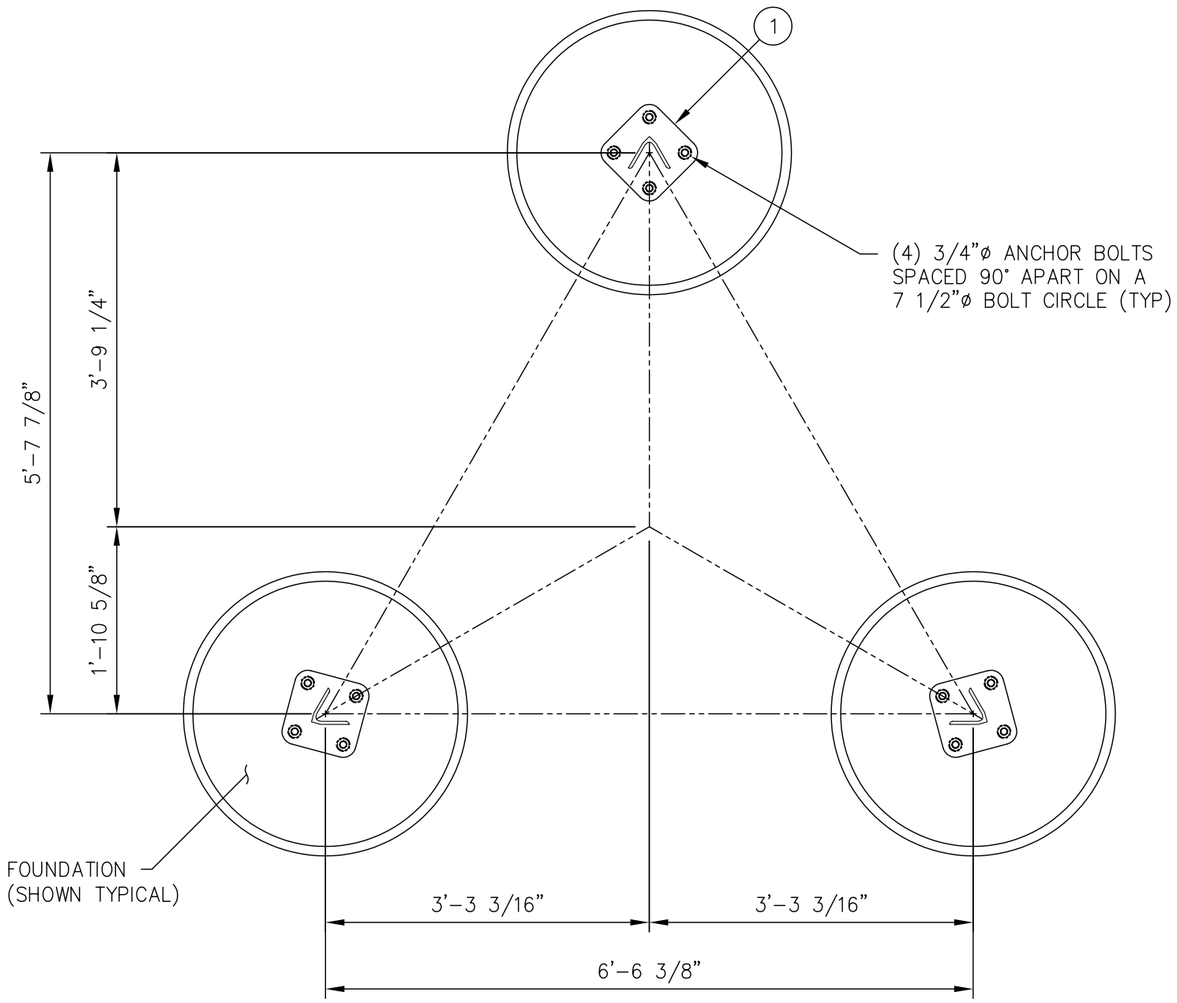

PLAN VIEW

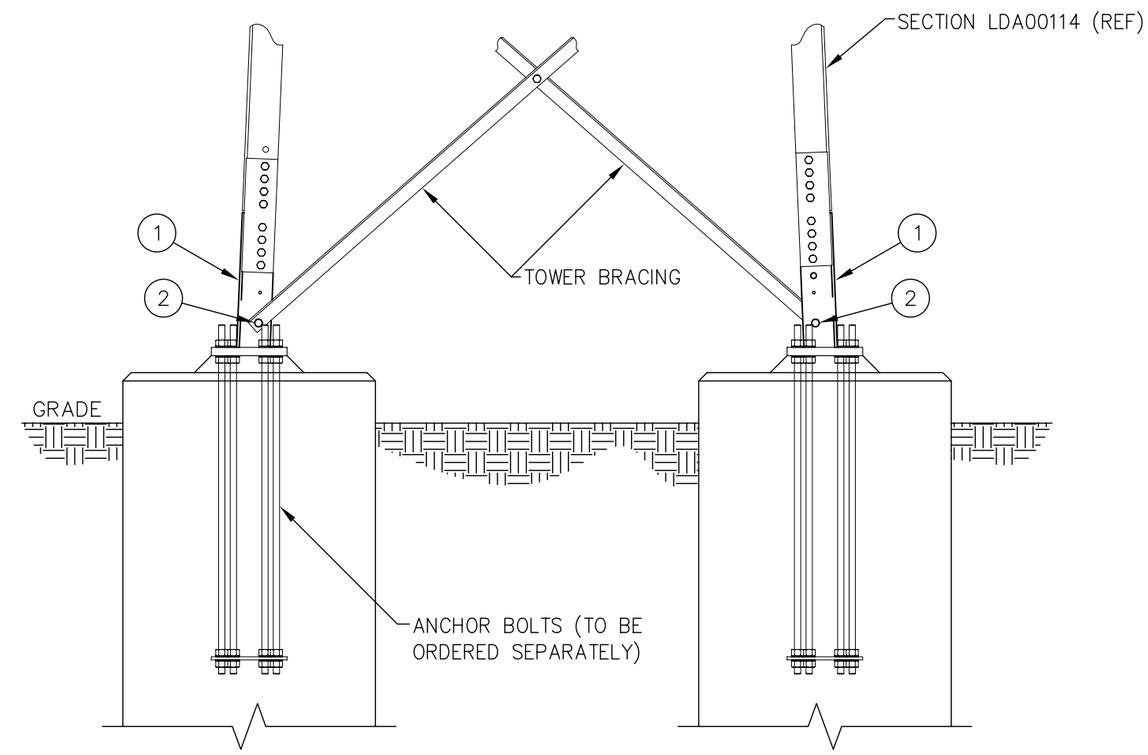

ELEVATION VIEW

UNLESS OTHERWISE SPECIFIED
ALL DIMENSIONS INCLUDE
FINISHES AND ARE IN INCHES

TOLERANCES: FRACTIONS ± 1/16"
ANGLES ± 1/2 DEG.
DECIMALS ± .010"

MATERIAL:

TOLERANCES DO NOT APPLY
TO RAW MATERIAL

REV	DATE	DRW	CHK	DESCRIPTION

Sabre Towers & Poles

CONFIDENTIAL
This document and the information contained herein is the confidential trade secret property of Sabre Communications Corporation ("Sabre") and must not be reproduced, copied or used, in whole or in part, for any purpose without the prior written consent of Sabre.
© 2010 Sabre Communications Corporation. All rights reserved.

MODEL S3A SERIES LDA
BASE SHOE ASSEMBLY
SECTION 14

		SIZE	DRAWING NO.	REV
DATE	01/26/10	B	LDA00214	0
DRAWN BY	WRF			
CHECKED BY	KLE		SCALE None	PAGE 1 OF 1