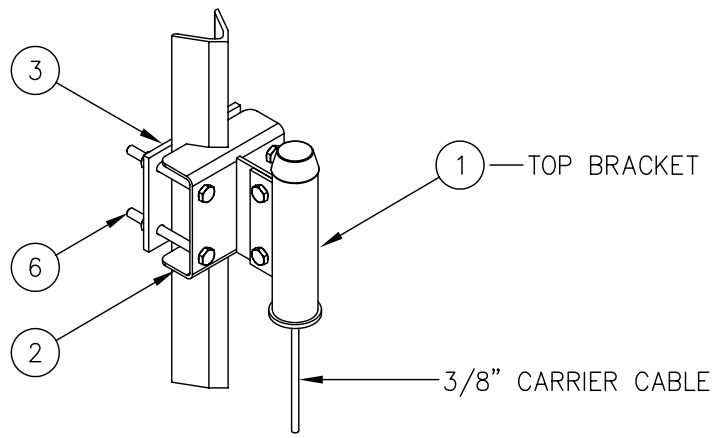

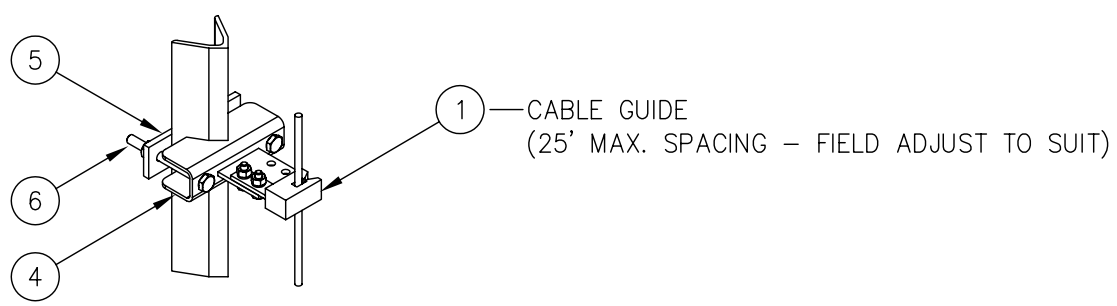

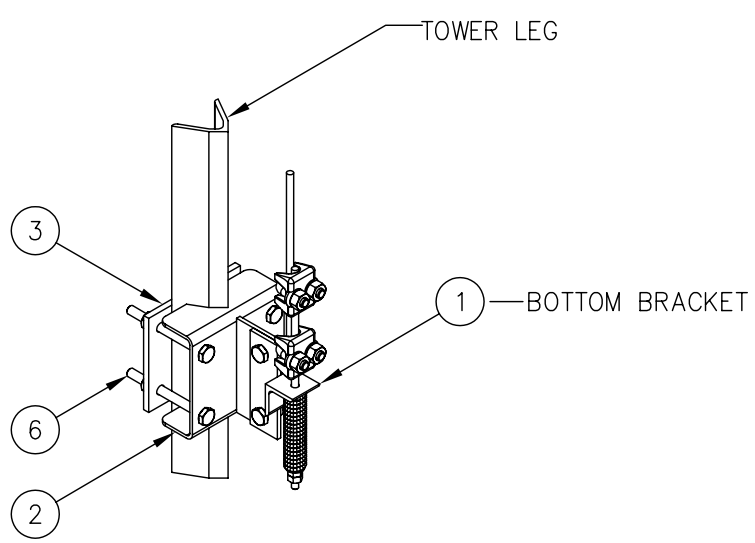

ELEVATION VIEW

C30906002 SAFETY CLIMB

(1)	C30188304	100' STANDARD CABLE SAFETY CLIMB KIT	46
(1)	CK00092	CABLE SAFETY CLIMB BRACKET KIT	42
		TOTAL WEIGHT	88

CABLE SAFETY CLIMB KIT

ITEM	QTY.	PART. NO.	DESCRIPTION	WEIGHT
1.	1	C30188304	100' STANDARD CABLE SAFETY CLIMB KIT	46
			TOTAL WEIGHT	46

CK00092 CABLE SAFETY CLIMB BRACKET KIT

ITEM	QTY.	PART. NO.	DESCRIPTION	WEIGHT
2.	2	CW00900	TOP/BOTTOM SAFETY CLIMB LEG BRACKET	12
3.	2	CS02339	BACK-UP PLATE FOR TOP/BOTTOM BRACKET	11
4.	3	CW00901	CABLE GUIDE LEG BRACKET	8
5.	3	CS02340	BACK-UP PLATE FOR CABLE GUIDE	5
6.	14	C40024106	BOLT ASSEMBLY, 1/2 X 6 1/2 GRADE 5 FULL THREAD	6
			TOTAL WEIGHT	42

UNLESS OTHERWISE SPECIFIED
ALL DIMENSIONS INCLUDE
FINISHES AND ARE IN INCHES

TOLERANCES: FRACTIONS ± 1/16"
ANGLES ± 1/2 DEG.
DECIMALS ± .010"

MATERIAL:

TOLERANCES DO NOT APPLY
TO RAW MATERIAL

REV	DATE	DRW	CHK	DESCRIPTION

Sabre™ Towers & Poles

CONFIDENTIAL
This document and the information contained herein is the confidential trade secret property of Sabre Communications Corporation ("Sabre") and must not be reproduced, copied or used, in whole or in part, for any purpose without the prior written consent of Sabre.
© 2010 Sabre Communications Corporation. All rights reserved.

MODEL S3A SERIES LDA
SAFETY CLIMB ASSEMBLY
60 FT THRU 100 FT.

		SIZE	DRAWING NO.	REV
DATE	3/11/10	B	C30906002	0
DRAWN BY	KLE			
CHECKED BY	EK		SCALE None	PAGE 1 OF 1