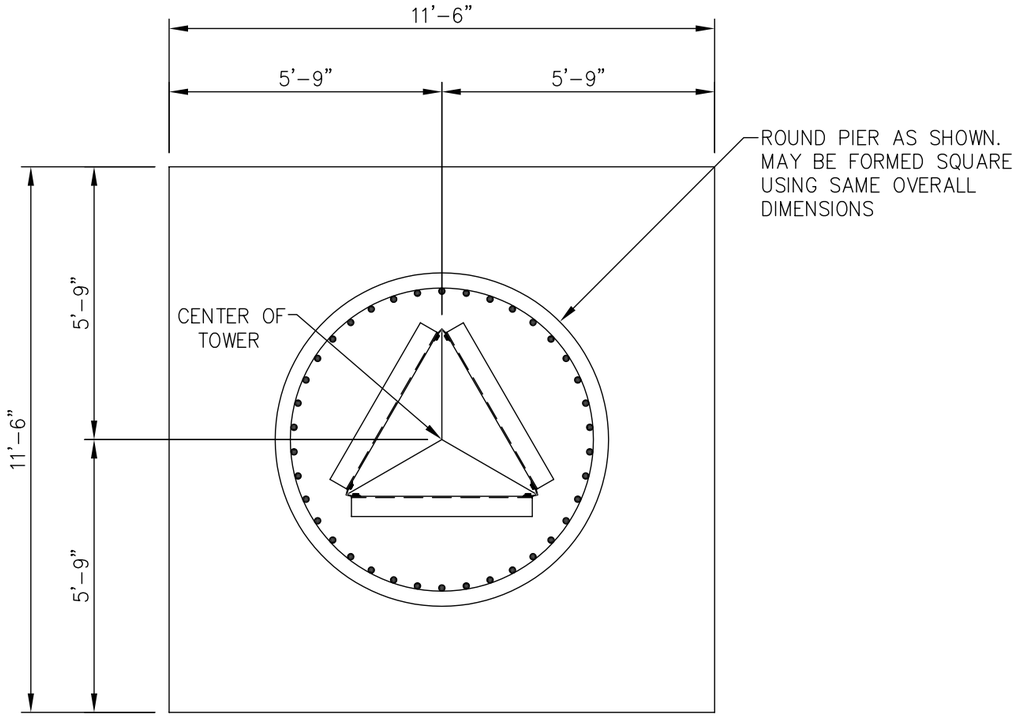

PLAN VIEW

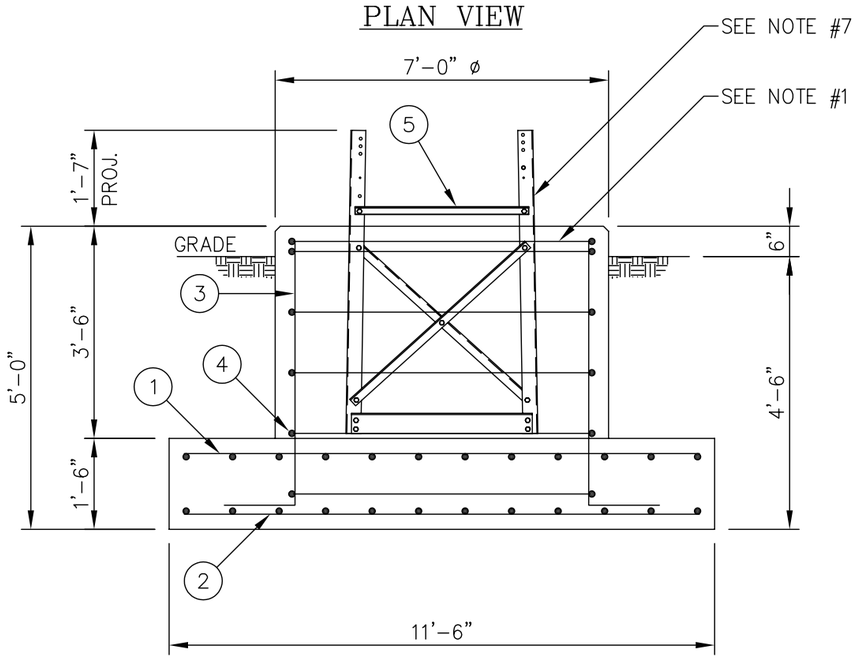

ELEVATION VIEW

REINFORCING STEEL SCHEDULE

ITEM	LOCATION	NO. REQ'D.	BAR SPC'G.	SIZE	CUT LGTH.	TOTAL LGTH.	TOTAL WT.	SHAPE
1	PAD TOP REINFORCING	24	EQUALLY SPACED	#8	11'-0"	264'-0"	705 LBS.	STRAIGHT
2	PAD BOTTOM REINFORCING	24	EQUALLY SPACED	#8	11'-0"	264'-0"	705 LBS.	STRAIGHT
3	PIER VERTICAL REINFORCING	38	EQUALLY SPACED	#9	5'-10"	221'-8"	754 LBS.	
4	PIER TIES	6	SPACED 12" C/C	#4	21'-8"	130'-0"	87 LBS.	6'-6" O.D.
						TOTAL REBAR WT.	2251 LBS.	

EMBEDDED SECTION

ITEM	PART NO.	DRAWING NO.
5	LDA00610	LDA00610 (SEE NOTE #7)

CONCRETE REQ'D	ROUND PIER	SQUARE PIER
PAD	7.35 CU. YDS.	7.35 CU. YDS.
PIER	4.99 CU. YDS.	6.35 CU. YDS.
TOTAL	12.34 CU. YDS.	13.70 CU. YDS.

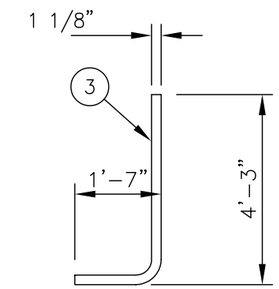

REBAR DETAIL
(PIER VERTICAL REBAR)

GENERAL NOTES

1. CONCRETE SHALL HAVE A MINIMUM 28-DAY COMPRESSIVE STRENGTH OF 3000 PSI, IN ACCORDANCE WITH ACI 318-05. (2 REBAR TIES REQ'D IN THE TOP 5")
2. REBAR TO CONFORM TO ASTM SPECIFICATION A615 GRADE 60.
3. ALL REBAR TO HAVE A MINIMUM OF 3" CONCRETE COVER.
4. ALL EXPOSED CONCRETE CORNERS TO BE CHAMFERED 3/4".
5. SEE THE GEOTECHNICAL REPORT FOR COMPACTION REQUIREMENTS, IF SPECIFIED.
6. THE FOUNDATION DESIGN IS BASED ON AN ALLOWABLE BEARING PRESSURE OF AT LEAST 2 KSF. THE ADEQUACY OF THE SOIL MUST BE VERIFIED BEFORE INSTALLING THE FOUNDATION.
7. SEE DRAWING LDA00610 FOR ASSEMBLY OF DIRECT EMBED SECTION. CENTER DIRECT EMBED SECTION IN FOUNDATION PIER AS SHOWN IN PLAN VIEW.

UNLESS OTHERWISE SPECIFIED ALL DIMENSIONS INCLUDE FINISHES AND ARE IN INCHES

TOLERANCES: FRACTIONS ± 1/16"
ANGLES ± 1/2 DEG.
DECIMALS ± .010"

MATERIAL:

TOLERANCES DO NOT APPLY TO RAW MATERIAL

REV	DATE	DRW	CHK	DESCRIPTION

Sabre Towers & Poles

CONFIDENTIAL
This document and the information contained herein is the confidential trade secret property of Sabre Communications Corporation ("Sabre") and must not be reproduced, copied or used, in whole or in part, for any purpose without the prior written consent of Sabre.
© 2010 Sabre Communications Corporation. All rights reserved.

MODEL S3A SERIES LDA
FOUNDATION INSTALLATION
DIRECT EMBED SECTION 10

		SIZE	DRAWING NO.	REV
DATE	06/14/10	B	LDA00710	0
DRAWN BY	WRF			
CHECKED BY	KLE		SCALE NONE	PAGE 1 OF 1