Universal L-Bracket for VenDome Antenna Pole, Mast, and Wall Mounting

Connect, Protect, and Enable™

Installation Instructions:

For Pole and Mast Mounting

For 2 in. OD pipe/pole, clamp L-bracket (item #1) to the pipe/pole using supplied U-bolts (item #2) and hardware. Use pole clamp bracket (item #3) against the pipe/pole as shown in Figure 1. Firmly tighten hardware.

For Pole/Mast Larger Than 2 in. OD

Use supplied stainless steel band clamps (item #8) and pass through slots on the L-bracket as shown in Figure 2. Firmly tighten screw on the band clamp.

For Wall Mounting

Secure L-bracket (item #1) using appropriate ¼ in. screw and hardware to wall. Note: Installer to supply appropriate wall hardware.

Antenna Mounting

1. Remove nut from the antenna stud, slide leads through large open slot on the bracket, and pass antenna stud through mounting hole.
2. Re-insert the antenna nut (and use flat washer if needed) and firmly tighten it.

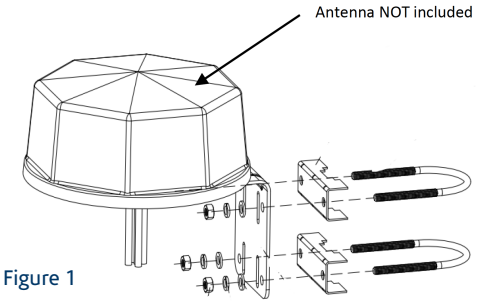

Figure 1

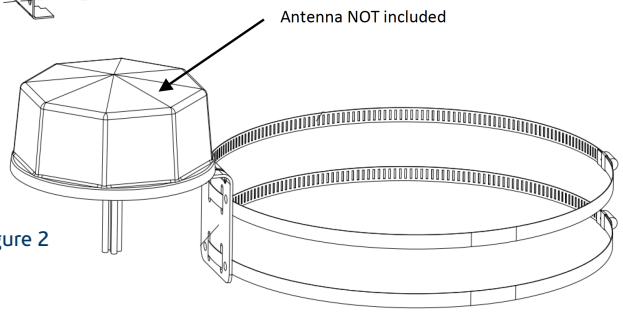

Figure 2

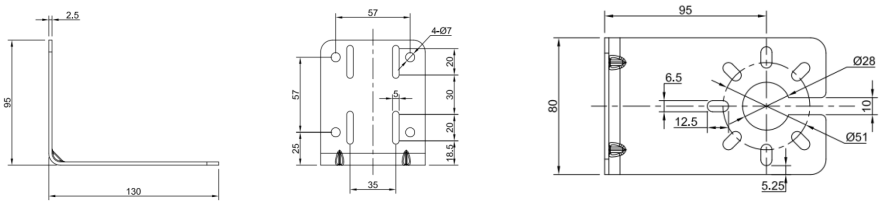

All dims are in mm.

Description	SKU	MFG Part #
Universal L-bracket 2-14 in. OD	274461	VEN-ULBD-0214

Features & Benefits

- Universal L-bracket works with most VenDome and outdoor omnidirectional antennas
- Heavy duty construction suitable for harsh environment deployments; Mounts to wall or pole/mast from 2 to 14 in. OD
- Slotted L-bracket offers quick antenna mounting

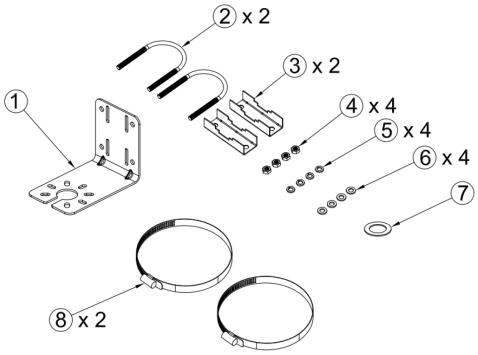

No.	Item Description	Qty.
1	L-Bracket	1
2	U-bolt 2 in. OD	2
3	Pole Clamp Bracket	2
4	Nuts for U-bolt	4
5	Lock Washer for U-bolt	4
6	Flat Washer for U-bolt	4
7	1 in. Flat Washer for U-bolt	1
8	Pole Clamps, Stainless Steel	2

Every Ventev bracket is RoHS compliant and covered by company's 2-year warranty program.