LTB301-3C3C00-GRY-36

Multi-band 4G/LTE 2X MIMO Antenna
Dual 694-960 MHz, 1710-2700 MHz
NO GPS

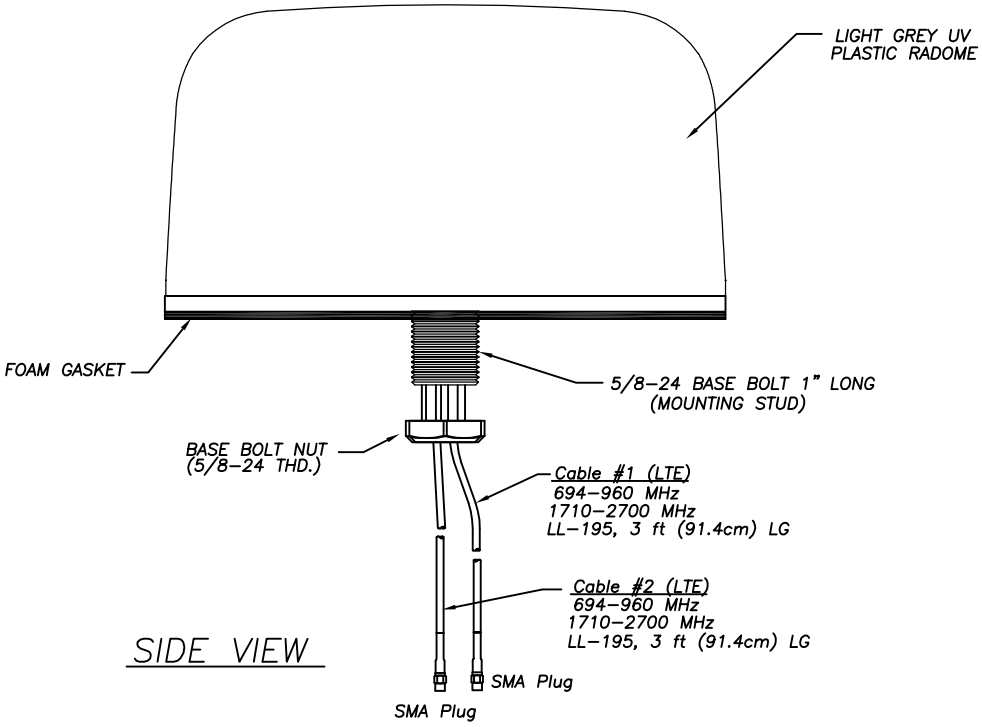

SIDE VIEW

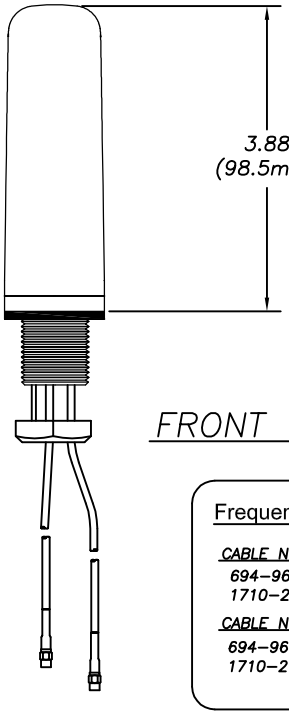

FRONT VIEW

Frequency and Cable Table

CABLE NO. 1 (LL–195 CABLE)
694–960 MHz (LTE)
1710–2700 MHz (LTE)

CABLE NO. 2 (LL–195 CABLE)
694–960 MHz (LTE)
1710–2700 MHz (LTE)

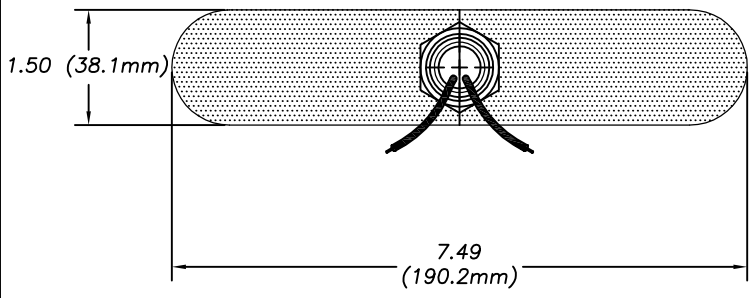

BOTTOM VIEW

Antenna Specifications:

Gain:	694–960 MHz 3dBi Peak 1710–2700 MHz 4dBi Peak
VSWR:	< 2:1 VSWR over range
Maximum Power:	10 Watts
Connectors/Interface:	SMA Plugs shown, connectors may vary
Case:	7.49" lg x 1.50" Wide. x 3.88" High
Radome Material:	Light Grey UV Inhibative Plastic
Cable	cable 1 — LL–195, 3 ft (694–960 MHz/1710–2700 MHz) cable 2 — LL–195, 3 ft (694–960 MHz/1710–2700 MHz)
Impedance:	50 OHM Nominal
Mounting:	5/8" Dia. Feed through. 1" lg. thread for up to 3/4" thick surface (Electrical Cabinet)
Operating Temperature:	–40° to +80° C
Shock & Vibration:	EN300 019–2–4, IEC 60068, SAE J1455
Dust/Water Ingress:	IP67

** No Groundplane Required

All specifications subject to change

GK 11/21/24 A

MobileMark antenna solutions

US OFFICE & HEADQUARTERS: 1140 W. THORNDALE AVE. ITASCA, IL 60143
TEL: (847) 671-6690 * FAX (847) 250-5120

UK OFFICE: 8 MIRAS BUS PARK, KEYS PARK ROAD. HEDNESFORD WS12 2FS, UK.
UK TEL: (+44) 1543-459555 FAX (+44) 1543-459545

VISIT OUR WEBSITE AT WWW.MOBILEMARK.COM

RoHS Compliant