CBC78-DS-43 | E14F05P18

Diplexer 698-803/824-894 MHz, DC Sense, 4.3-10

- Automatic dc switching with dc sense
- Convertible mounting brackets
- Stackable in multiples with included hardware

Product Classification

Product Type	Diplexer

General Specifications

Product Family	CBC78
Color	Gray
Common Port Label	COMMON
Modularity	1-Single
Mounting	Pole | Wall
Mounting Pipe Hardware	Band clamps (2)
RF Connector Interface	4.3-10 Female
RF Connector Interface Body Style	Long neck

Dimensions

Height	162 mm | 6.378 in
Width	176 mm | 6.929 in
Depth	73.5 mm | 2.894 in
Ground Screw Diameter	6 mm | 0.236 in

©2020 CommScope, Inc. All rights reserved. All trademarks identified by ® or ™ are registered trademarks, respectively, of CommScope. All specifications are subject to change without notice. See www.commscope.com for the most current information. Revised: April 27, 2020

CBC78-DS-43 | E14F05P18

Outline Drawing

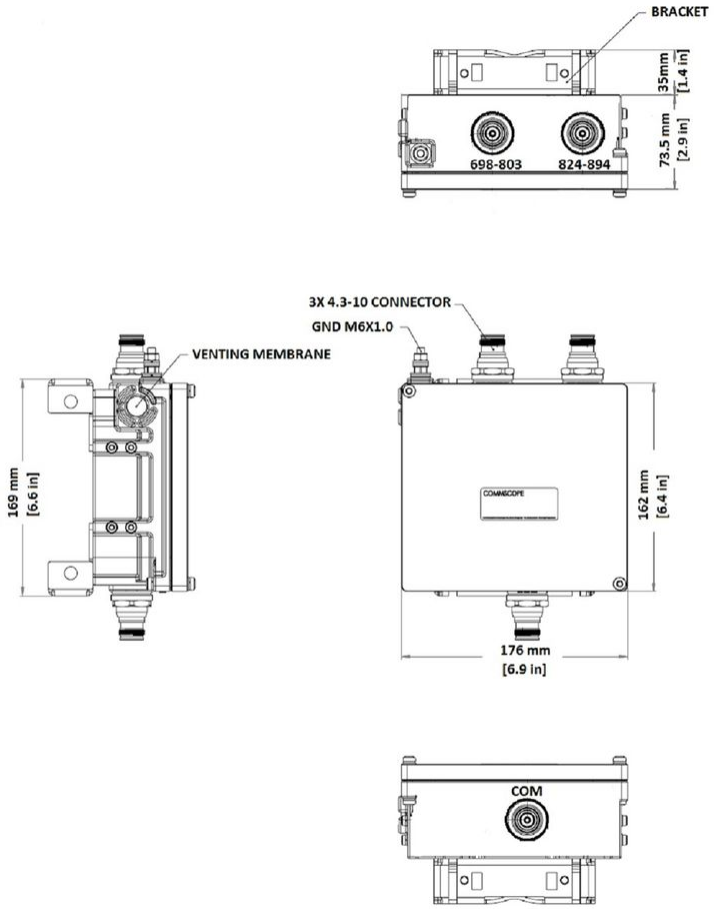

Electrical Specifications

Impedance	50 ohm
License Band, Band Pass	CEL 850 | USA 700 | USA 750

Electrical Specifications, Common Port

Composite Power, RMS	250 W

Electrical Specifications, dc Power/Alarm

dc/AISG Pass-through Method	Auto sensing
dc/AISG Pass-through Path	See logic table
Lightning Surge Current	10 kA

©2020 CommScope, Inc. All rights reserved. All trademarks identified by ® or ™ are registered trademarks, respectively, of CommScope. All specifications are subject to change without notice. See www.commscope.com for the most current information. Revised: April 27, 2020

Lightning Surge Current Waveform	8/20 waveform

Electrical Specifications, AISG

AISG Carrier	2176 KHz ± 100 ppm
Insertion Loss, maximum	1 dB
Return Loss, minimum	15 dB

Electrical Specifications

Sub-module	**1**	**1**	**1**
Branch	1	1	2
Port Designation	698-803		824–894
License Band	[15, 16]	[15, 16]	CEL 850, Band Pass

Electrical Specifications, Band Pass

Frequency Range, MHz	**698–803**	**698–798**	**824–894**
Insertion Loss, typical, dB	0.3	0.2	0.2
Total Group Delay, maximum, ns	45		35
Return Loss, minimum, dB	22		22
Return Loss, typical, dB	24		24
Isolation, minimum, dB	35	50	50
Input Power, RMS, maximum, W	200		200
Input Power, PEP, maximum, W	2000		2000
3rd Order PIM, minimum, dBc	-161		-161
3rd Order PIM Test Method	2 x 20 W CW tones		2 x 20 W CW tones

©2020 CommScope, Inc. All rights reserved. All trademarks identified by ® or ™ are registered trademarks, respectively, of CommScope. All specifications are subject to change without notice. See www.commscope.com for the most current information. Revised: April 27, 2020

Block Diagram

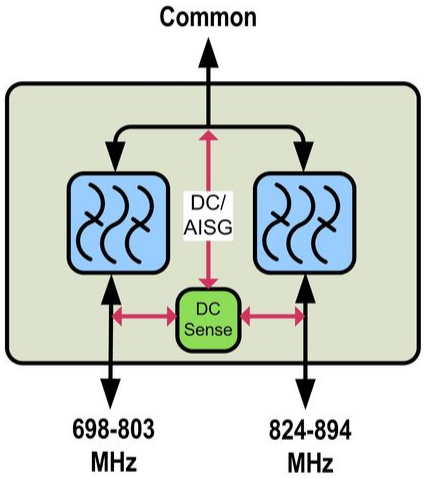

Logic Table

©2020 CommScope, Inc. All rights reserved. All trademarks identified by ® or ™ are registered trademarks, respectively, of CommScope. All specifications are subject to change without notice. See www.commscope.com for the most current information. Revised: April 27, 2020

Combining Mode Operation (Ground Based)			
RF Ports Input Voltage			
700 MHz	800 MHz	COMMON	DC/AISG Path Selection
7 ≤ V ≤ 30	V<7	V<7	**700 MHz to COMMON "ON"** 800 MHz Port "OFF"
V<7	**7 ≤ V ≤ 30**	V<7	**800 MHz to COMMON "ON"** 700 MHz "OFF"
7 ≤ V ≤ 30	**7 ≤ V ≤ 30**	V<7	**700 MHz to COMMON "ON"** 800 MHz "OFF"
V<7	V<7	V<7	ALL ports OFF

Splitting Mode Operation (Tower Top)			
RF Ports Input Voltage			
700 MHz	800 MHz	COMMON	DC/AISG Path Selection
V<7	V<7	7 ≤ V ≤ 30	**700 MHz to COMMON "ON"** 800 MHz "OFF"

Environmental Specifications

Operating Temperature	-40 °C to +65 °C (-40 °F to +149 °F)
Relative Humidity	5%–100%
Corrosion Test Method	IEC 60068-2-11, 30 days
Ingress Protection Test Method	IEC 60529:2001, IP67

Packaging and Weights

Included	Mounting hardware
Mounting Hardware Weight	0.5 kg | 1.102 lb
Weight, without mounting hardware	2.7 kg | 5.952 lb

©2020 CommScope, Inc. All rights reserved. All trademarks identified by ® or ™ are registered trademarks, respectively, of CommScope. All specifications are subject to change without notice. See www.commscope.com for the most current information. Revised: April 27, 2020

COMMSCOPE®